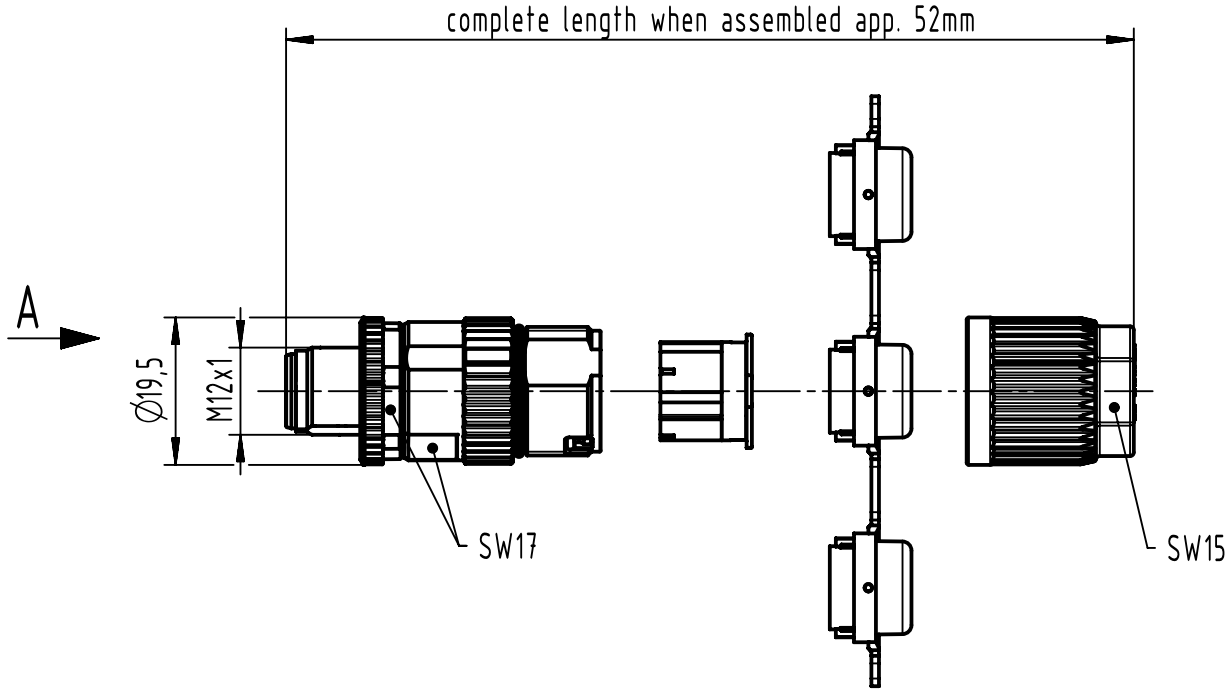

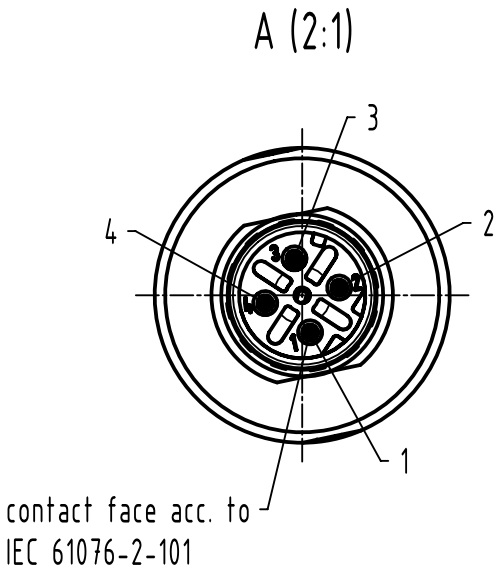

conductor cross section	cable outside diameter
0.14 - 0.34mm² AWG26-AWG22	4.5 - 8.8mm

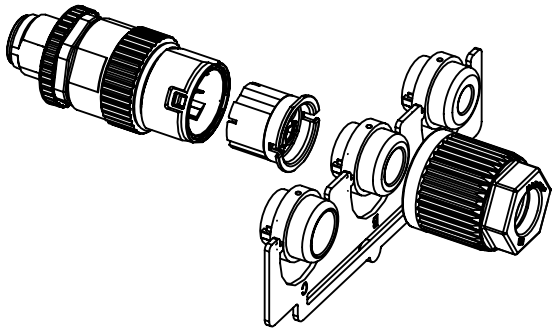

All Dimensions in mm
Original Size DIN A4

Scale 1:1

Free size tol.

Ref.

Sub.

All rights reserved

Department EL PD

Created by DYCKC

Inspected by EISFELD

Standardisation 302077

Date 2020-10-22

State Final Release

Title HARAX M12-L shielded male 4-pole D-coded

Doc-Key / ECM-Nr. 100195995/UGD/004/G 500000179215

HARTING Electronics GmbH
D-32339 Espelkamp

Type TB

Number 21032811405

Rev. G

Page 1/1

A4